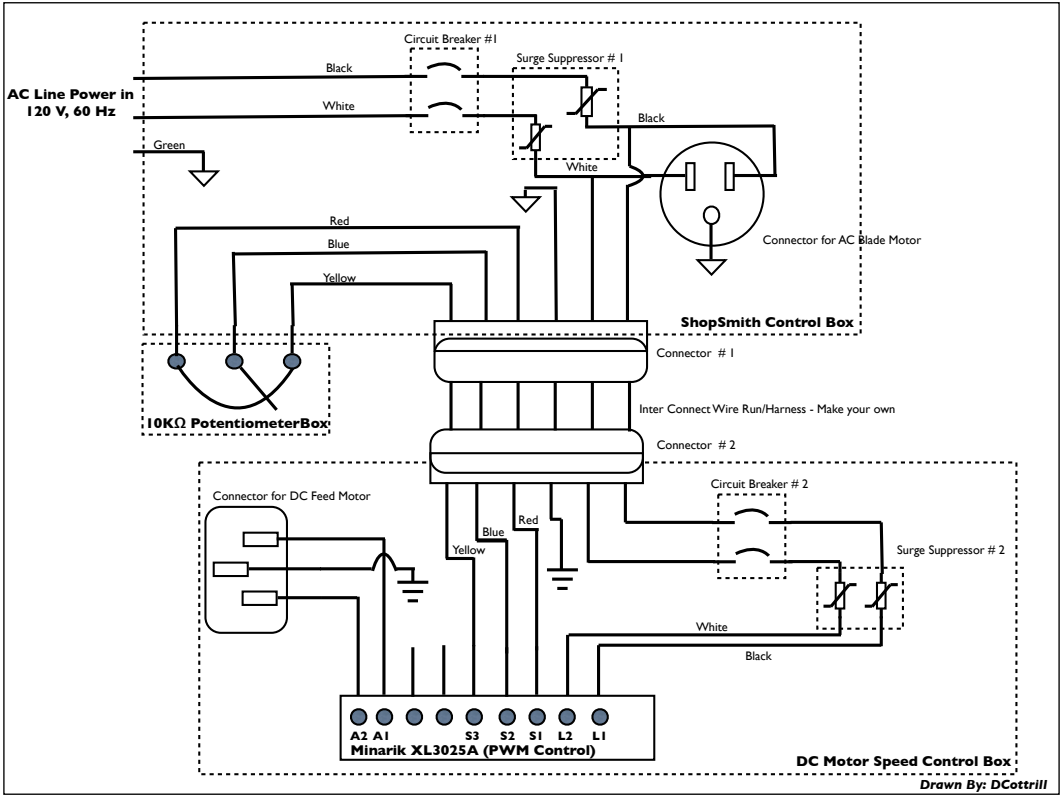
Circuit Breaker #1
Surge Suppressor # 1
AC Line Power in
120 V, 60 Hz
Black
White
Green
Black
White
Connector for AC Blade Motor
Red
Blue
Yellow
ShopSmith Control Box
Connector # 1
10KΩ PotentiometerBox
Inter Connect Wire Run/Harness - Make your own
Connector # 2
Connector for DC Feed Motor
Circuit Breaker # 2
Blue
Red
Yellow
Surge Suppressor # 2
White
Black
A2 A1 S3 S2 S1 L2 L1
Minarik XL3025A (PWM Control)
DC Motor Speed Control Box
Drawn By: DCottrill