MAXI-CLAMP® CADDY

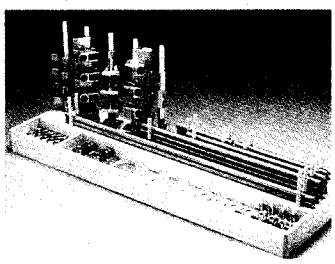

Here's a project that will keep all your Maxi-Clamp System parts separated but within easy reach. Take a twenty-inch-long piece of 2 x 6 and drill the 5/16" and 1/4" holes where indicated in the drawing. Next, form a 2 1/4" wide by 1" deep rabbet along the front edge. Glue and clamp the sides and the divider into place. Sand the front edge flush, then glue and clamp the front to the caddy, and glue the dowels in place. Stack threaded rods between the shorter dowels, and blocks and knobs on the 5/16" dowels. Place nuts, washers, and other miscellaneous parts in the tray.

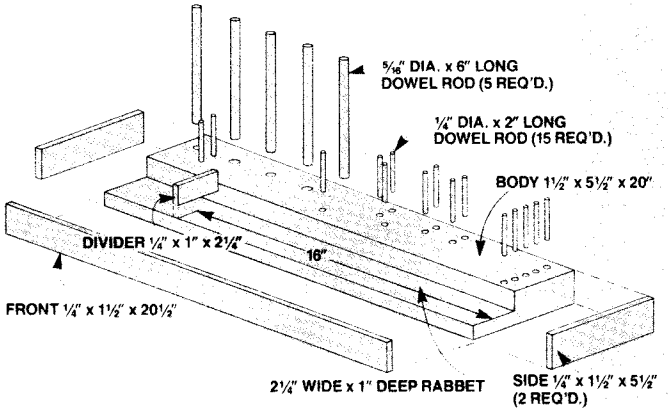

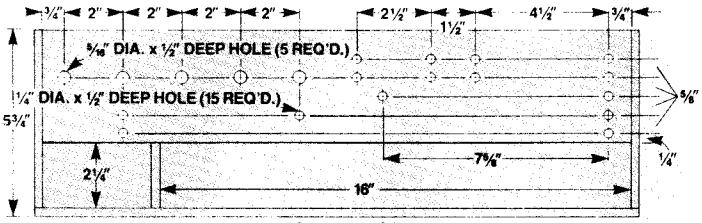

HOLE LAYOUT

CLUB UPDATE

Last October, a new bimonthly newsletter called *SHAVINGS* rolled off the presses. Published especially for members of the International Woodworking Exchange, the first issue features an exchange of information and ideas for woodworkers around the world. Membership in the organization is open to anyone interested in woodworking.

The first issue of *SHAVINGS* was sent to the members of 84 independent woodworking clubs, and to more than 14,000 Shopsmith "Good Neighbors."

For additional information on joining the "Exchange" or forming a woodworking club, or receiving *SHAVINGS*, write to: Shopsmith Inc., Attn: Vince Pax, 6640 Poe Avenue, Dayton, OH 45414-2591.

HANDS OFF

Care should be taken when using hand chisels or gouges. Striking the end of the handle with the palm of your hand can cause serious damage to nerve endings, possibly resulting in a permanent injury. It's always advisable to use a mallet for this type of "persuasion." **Tom Kemmerer, Kettering, Ohio.**

RUST BUSTER

"If the metal table on your power tool is discolored and beginning to corrode, here's a tip I've used for years. Lightly sand the table with 300 or 400 grit wet/dry sandpaper, then thoroughly clean with mineral spirits. Next, coat the surface with baby powder, (by adding corn starch the mixture is even more effective). Finally, add a coat of furniture paste wax and buff. The results are a prolonged life and cleaner appearance for your metal table." **Ted Denman, Shopsmith Instructor.**

SAFETY UPDATE

"The two safety articles in your Mar/Apr/May 84 issue (pp. 12-13, and 26) are very good. Both articles show a respirator with dual fiber pre-filters and activated charcoal filters. These filters are necessary when using acrylic enamels, urethanes and polyurethanes, and are adequate protection from most painting and refinishing vapors. But it's important to remember that extended exposure to these materials (especially hardener catalyst) requires a mask with a fresh air source.

"When exposed to normal humidity, the pores in the charcoal filters clog and are no longer activated. When purchasing these filters, make sure the airtight seal is still intact. If the seal is broken, the filter is useless within 48 hours. Here's a way to extend the usable life of these filters. After each use, wipe all condensation off the mask and seal the mask in a dry, airtight plastic bag.

"As a former vocation agriculture instructor, body shop operator, and insurance claims adjustor, I'm constantly amazed at the chances people needlessly take. Hope this advice is helpful to other readers." **Jerry D. Patton, Bono, Arkansas.**

THE FINISH LINE

by Alan Mills

Q. Years ago I heard of a beeswax finish that contained a mixture of beeswax and oils. What are the oils and the correct proportions to make this finish?

A. In restoring antiques, I've run across beeswax finishes and know of woodworkers who still make their own. One commonly used formula is 1/3 beeswax, 1/3 tung oil (polymerized), and 1/3 linseed oil. Heat in a double boiler or glue pot until beeswax melts. When cool, it's about the same consistency as petroleum jelly. With a cloth, rub the finish into the wood and buff out after it dries. This mixture is usually applied as a final finish over two or three coats of penetrating oil.

Q. Recently, I've been using a mixture of Danish oil and polyurethane. I like the look and feel of this finish, but it's slow to dry. Is there any way to speed the drying process?

A. Sounds like a problem in your method of application. After saturating the surface with the mixture and letting it soak in for 10-15 minutes, it's crucial to wipe *all* excess oil from the surface. This leaves a very thin film of finish that should dry completely in 24 hours.

Q. I have a beautiful antique walnut table that seems to have a wax buildup. It collects fingerprints and smudges easily and remains dull even after vigorous polishing efforts. What's a safe, easy way to remove this buildup?

A. Your diagnosis sounds correct. Most common brands of spray or liquid furniture cleaner will work fine on wax buildup. Or simply try turpentine on a rag. Regardless of what method you try, experiment first on an inconspicuous spot. In the future, try polishing your table with lemon oil and a soft cloth.

Q. I like to work with penetrating oil finishes because they're easy to apply. To remove the stickiness from my hands, I use solvents (turpentine or mineral spirits). They work but are harsh to my skin and leave a lingering odor. Any suggestions?

A. I had the same problem until discovering that the grease-removing hand cleaners used by mechanics are equally effective at removing wood finishes. In addition, most brands contain lanolin to help condition the skin. You'll find these cleaners in hardware or auto parts stores.

Send your inquiries to: Finish Line, *Hands On*, 6640 Poe Avenue, Dayton, OH 45414-2591. Because of the volume of mail, we cannot answer all questions individually.